120x120x38 mm

93.0~138.0 CFM

Specifications

MAGLev by SUNON	Bearing	Rating Voltage	Power Current	Power Consumption	Speed	Air Flow	Static Pressure	Noise	Weight	Curve
	● VAPO	(VDC)	(mA)	(WATTS)	(RPM)	(CFM)	(inch-H_2O)	(dB(A))	(g)	
MEC0381V1-000U-A99	●	12	833	10.0	3100	138.0	0.36	48.0	218.0	1
MEC0381V2-000U-A99	●	12	421	5.1	2600	116.0	0.26	44.0	218.0	2
MEC0381V3-000U-A99	●	12	241	2.9	2100	93.0	0.18	37.0	218.0	3
MEC0382V1-000U-A99	●	24	383	9.2	3100	138.0	0.36	48.0	218.0	1
MEC0382V2-000U-A99	●	24	224	5.4	2600	116.0	0.26	44.0	218.0	2
MEC0382V3-000U-A99	●	24	130	3.1	2100	93.0	0.18	37.0	218.0	3
MEC0384V1-000U-A99	●	48	203	9.7	3100	138.0	0.36	48.0	218.0	1
MEC0384V2-000U-A99	●	48	120	5.8	2600	116.0	0.26	44.0	218.0	2
MEC0384V3-000U-A99	●	48	69	3.3	2100	93.0	0.18	37.0	218.0	3

Model	Bearing	Rating Voltage	Power Current	Power Consumption	Speed	Air Flow	Static Pressure	Noise	Weight	Curve
	◐ 2BALL ○ Sleeve	(VDC)	(mA)	(WATTS)	(RPM)	(CFM)	(inch-H_2O)	(dB(A))	(g)	
EEC0381B1-000U-A99	◐	12	833	10.0	3100	138.0	0.36	48.0	214.0	1
EEC0381B2-000U-A99	◐	12	421	5.1	2600	116.0	0.26	44.0	214.0	2
EEC0381B3-000U-A99	◐	12	241	2.9	2100	93.0	0.18	37.0	214.0	3
EEC0382B1-000U-A99	◐	24	383	9.2	3100	138.0	0.36	48.0	214.0	1
EEC0382B2-000U-A99	◐	24	224	5.4	2600	116.0	0.26	44.0	214.0	2
EEC0382B3-000U-A99	◐	24	130	3.1	2100	93.0	0.18	37.0	214.0	3
EEC0384B1-000U-A99	◐	48	203	9.7	3100	138.0	0.36	48.0	214.0	1
EEC0384B2-000U-A99	◐	48	120	5.8	2600	116.0	0.26	44.0	214.0	2
EEC0384B3-000U-A99	◐	48	69	3.3	2100	93.0	0.18	37.0	214.0	3

Air Flow-Static Pressure Characteristics

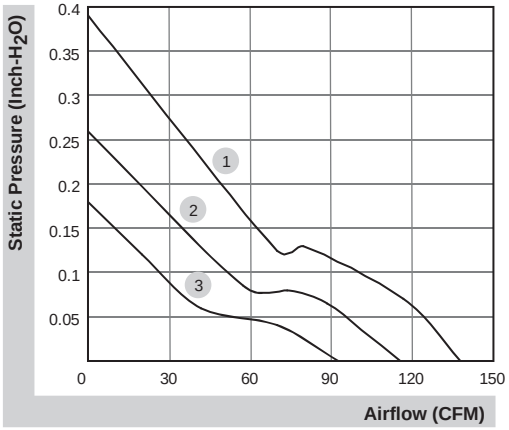

External dimensions(mm)

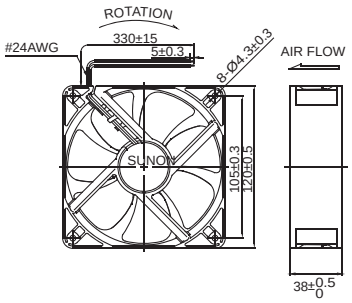

INLET

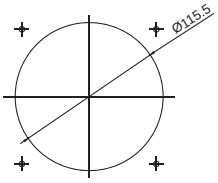

OUTLET

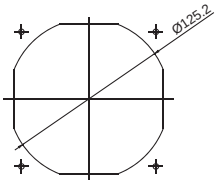

*All model could be customized. Please contact with Sunon Sales

Beijing Hengrui Mechanical and Electrical Equipment Co,Ltd
+86 10-62547612
zhangyu@bjhengrui.cn
en.bjhengrui.com

Blower Series New Model Numbering System

M F 50 15 1 V 1 – B 00U – A99

Function Code
999: standard model
A99: AutoRestart
C99: F type (3rd wire)
D99: with PWM
F99: AutoRestart and R type(3rd wire)
G99: AutoRestart and F type(3rd wire)
H99: AutoRestart and with PWM
Q99: AutoRestart , R type and with PWM
S99: AutoRestart , F type and with PWM

Customer Code

Generation Code
B : Blower

Speed
X: Super High 1: High 2: Medium 3: Low
4: Super Low

Bearing
V: Vapo B: 2 Ball S: Sleeve

Voltage
0: 5VDC 1: 12VDC 2: 24VDC 3: 36VDC
4: 48VDC

Fan Thickness
0~9
A~Z

Frame Size
0~9
A~Z

Code	Size(mm)	Code	Size(mm)	Code	Size(mm)	Code	Size(mm)
01~09	01~09	A0~A9	100~109	K0~K9	200~209	V0~V9	300~309
10~19	10~19	B0~B9	110~119	L0~L9	210~219	W0~W9	310~319
20~29	20~29	C0~C9	120~129	M0~M9	220~229	X0~X9	320~329
30~39	30~39	D0~D9	130~139	N0~N9	230~239	Y0~Y9	330~339
40~49	40~49	E0~E9	140~149	P0~P9	240~249	Z0~Z9	340~349
50~59	50~59	F0~F9	150~159	Q0~Q9	250~259		
60~69	60~69	G0~G9	160~169	R0~R9	260~269		
70~79	70~79	H0~H9	170~179	S0~S9	270~279		
80~89	80~89	I0~I9	180~189	T0~T9	280~289		
90~99	90~99	J0~J0	190~199	U0~U9	290~299		

Motor Type

Series Code
M Series E Series P Series

Certification

Safety

* Note: For critical or extreme environments, including non stop operation, please contact Sunon and we will gladly provide assistance with your product selection to ensure an appropriate cooling product for your application.
* Note: The "Life Expectancy" of the fan has not been evaluated for use in combination with any end application. Therefore, the Life Expectancy Test Reports(L10 and MTTF Report) that relate to the fan are only for reference.

Blower Series Old Model Numbering System

GB 12 05 P K V 1 – 8

Motor Poles
- 8: 8 Poles
- 6: 6 Poles
- Blank: 4 Poles

Speed
- X: Super
- 1: High
- 2: Middle
- 3: Low
- 4: Extra Low

Bearing System
- V: Vapo
- B: Ball

Frame Thickness

E: 6mm	B: 24mm	I: 35mm
D: 8mm	T: 25mm	M: 38mm
F: 10mm	Q: 28mm	O: 40mm
G: 12mm	N: 30mm	P: 56mm
H: 15mm	L: 32mm	W: 60mm
K: 20mm	Y: 33mm	

Frame Material
- P: PBT Plastic
- A: Aluminum

Frame Size

17:17mm	38:38mm	06:60mm	97:97mm
01:20mm	04:40mm	07:70mm	12:120mm
02:25mm	45:45mm	75:75mm	
03:30mm	05:50mm	08:80mm	
35:35mm	55:55mm	09:92mm	

Voltage

05:5VDC	12:12VDC
24:24VDC	48:48VDC

Blower Series
- GB Series
- PMB Series

P/N

Example: PMD1206PTVX P/N:U.GN

- (2) Two ball bearing
- GN RoHS compliance

Certification

Safety

* Note: For critical or extreme environments, including non stop operation, please contact Sunon and we will gladly provide assistance with your product selection to ensure an appropriate cooling product for your application.
* Note: The "Life Expectancy" of the fan has not been evaluated for use in combination with any end application. Therefore, the Life Expectancy Test Reports(L10 and MTTF Report) that relate to the fan are only for reference.